3501 CR 6 EAST
ELKHART, IN 46514

MODEL 9700
PVC FIXED WINDOW
w/ NAILING FIN
"NON-IMPACT"

L. F. SCHMIDT
LICENSE
No. 43409
STATE OF FLORIDA
PROFESSIONAL ENGINEER

Digitally signed by Lyndon F Schmidt
Date: 2023.10.04 08:15:13 -04'00'

This item has been digitally signed and sealed by **L. F. Schmidt, P.E.** on the date adjacent to the seal.

Printed copies of this document are not considered signed and sealed and the signature must be verified on any electronic copies.

THIS PRODUCT APPROVAL IS VALID ONLY FOR THE STATE OF FLORIDA

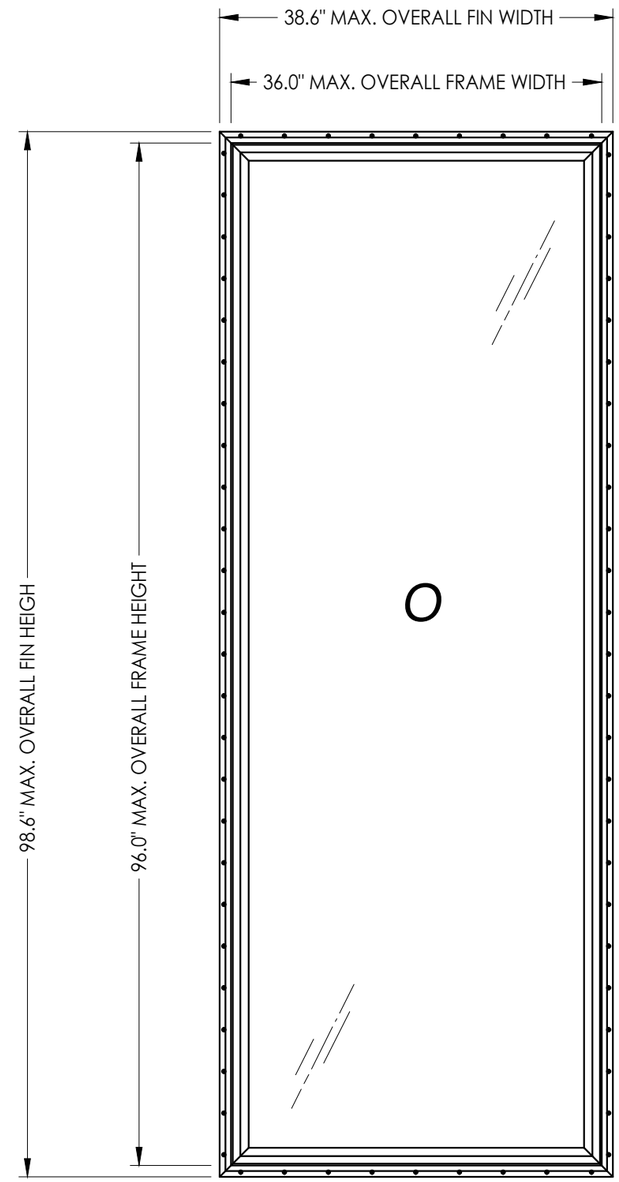

GENERAL NOTES

1. This product anchoring drawing has been developed in compliance with the 8th Edition (2023) Florida Building Code (FBC) excluding the "High Velocity Hurricane Zone". See the Certification Agency Certificate for sizes, specifications and ratings.
2. Product anchors shall be as listed and spaced as shown on details. Anchor embedment to base material shall be beyond wall dressing, stucco, foam, brick and other wall coverings.
3. Wood screws shall be installed following installation instructions of ANSI/AWC NDS 2018. All other fastener types to be installed following fastener manufacturer's installation instructions.
4. Fastener embedment depths, edge distances and center-center distances shall be as specified by the fastener manufacturer but in no instance shall they be less than shown in this drawing.
5. Where shims are used, they must be a "rigid / stiff" material that complies with the requirements of the FBC.
6. Positive and negative design pressure requirements for use with this drawing shall be determined by others for specific jobs in accordance with the governing code.
7. Site conditions not covered by this drawing are subject to further engineering analysis.

MAX. O.A. FIN DIMENSION	MAX. O.A. FRAME. DIMENSION	DESIGN PRESSURE (PSF)	
		POSITIVE	NEGATIVE
38.6" X 98.6"	36.0" X 96.0"	+70.0	-70.0
98.6" X 38.6"	96.0" X 36.0"	+70.0	-70.0

TABLE OF CONTENTS

SHEET #	DESCRIPTION
1	Typical elevation, design pressures & general notes
2	Horizontal & vertical cross sections & bill of materials
3	Horizontal & vertical cross sections
4	Buck & frame anchoring and glazing detail

Documents Prepared By:
Lyndon F. Schmidt
P.E. No. 43409
R.W. BUILDING CONSULTANTS, INC.
P.O. Box 230, Valrico, FL 33595
Phone No.: 813.659.9197
FBPE Registry No. 9813

PRODUCT: FIXED WINDOW

PART OR ASSEMBLY: TYPICAL ELEVATION, DESIGN PRESSURES & GENERAL NOTES

REVISIONS

NO.	DATE		BY
3	9/18/23	UPDATE TO 8TH ED. (2023) FBC	LFS
2	10/13/17	UPDATE TO 6TH ED. (2017) FBC	LFS
1	2/23/15	UPDATE TO 5TH ED. (2014) FBC	JK

DATE: 10/11/12
SCALE: N.T.S.
DWG. BY: JK
CHK. BY: LFS
DRAWING NO.: FL-995.6
SHEET 1 OF 4

© 2012 R.W. BUILDING CONSULTANTS INC.

Z:\2023 FBC Drawings\Lippert Components, Inc\FL-995 R12\FL-995.6.dwg

BILL OF MATERIALS		
ITEM	DESCRIPTION	MATERIAL
A	1/4" MAX. SHIM SPACE	-
B	2X BUCK (SG >= 0.42)	WOOD
C	MASONRY - 3,000 PSI MIN. CONCRETE CONFORMING TO ACI 301 OR HOLLOW BLOCK CONFORMING TO ASTM C90	CONCRETE
D	#8 X 1-1/4" PPH SMS (1-1/8" MIN. EMBEDMENT)	STEEL
E	1/4" X 2-3/4" PFH DeWALT OR ITW CONCRETE SCREW	STEEL
F	#8 X 1-3/4" PPH SMS (1-1/8" MIN. EMBEDMENT)	STEEL
G	2X FRAMING (SG >= 0.42)	WOOD

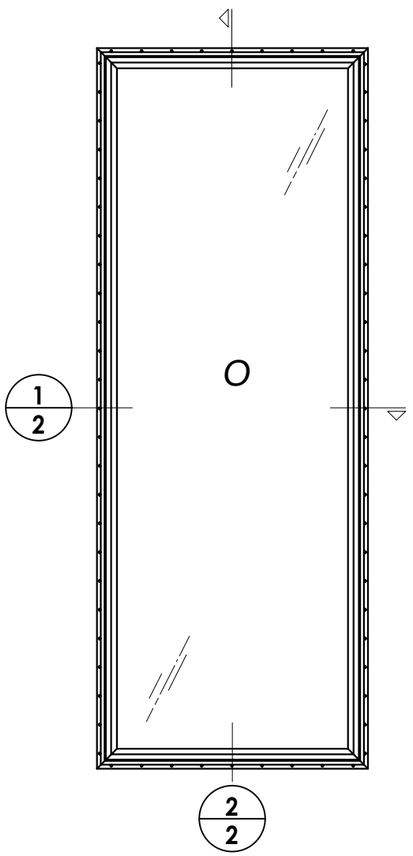

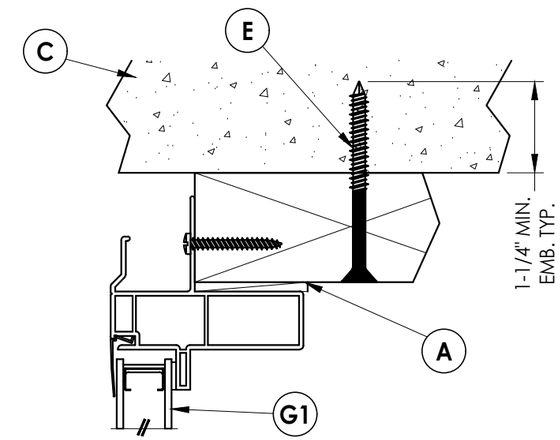

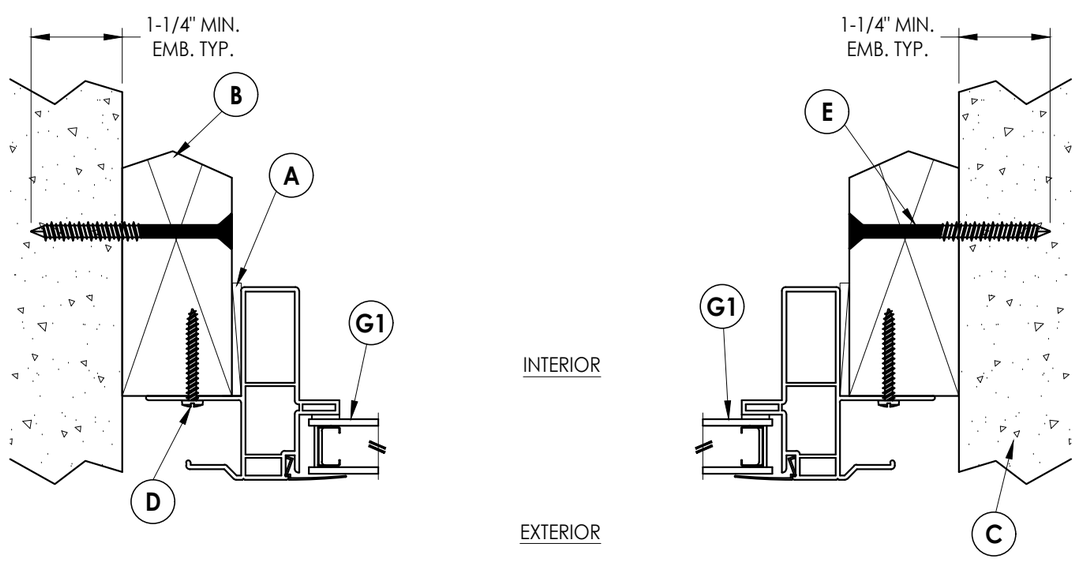

1/2 HORIZONTAL CROSS SECTION

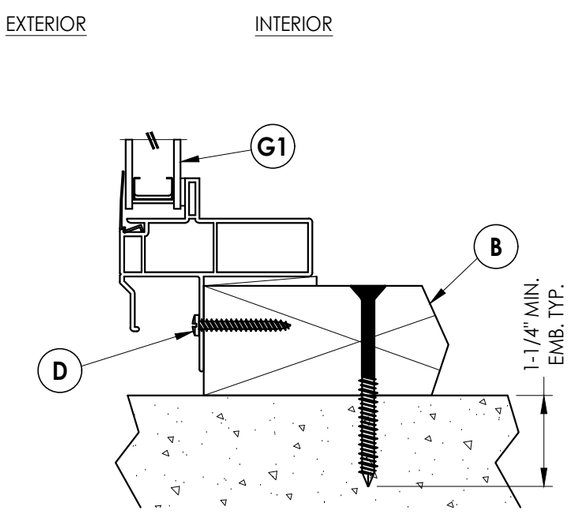

2/2 VERTICAL CROSS SECTION

Documents Prepared By:
Lyndon F. Schmidt
P.E. No. 43409

RW BUILDING CONSULTANTS, INC.
P.O. Box 230, Valrico, FL 33595
Phone No.: 813.659.9197
FBPE Registry No. 9813

PRODUCT: FIXED WINDOW

PART OR ASSEMBLY: HORIZONTAL & VERTICAL CROSS SECTIONS & BILL OF MATERIALS

NO.	DATE	REVISIONS	BY
1	2/23/15	UPDATE TO 5TH ED. (2014) FBC	JK
2	10/13/17	UPDATE TO 6TH ED. (2017) FBC	LFS
3	9/18/23	UPDATE TO 8TH ED. (2023) FBC	LFS

DATE: 10/11/12
SCALE: N.T.S.
DWG. BY: JK
CHK. BY: LFS
DRAWING NO.: FL-995.6
SHEET 2 OF 4

© 2012 R.W. Building Consultants Inc.

Z:\2023 FBC Drawings\Lippert Components, Inc\FL-995 R12\FL-995.6.dwg

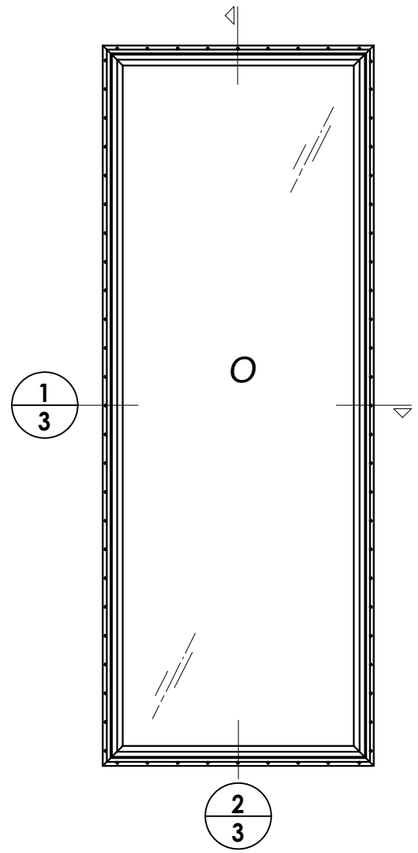

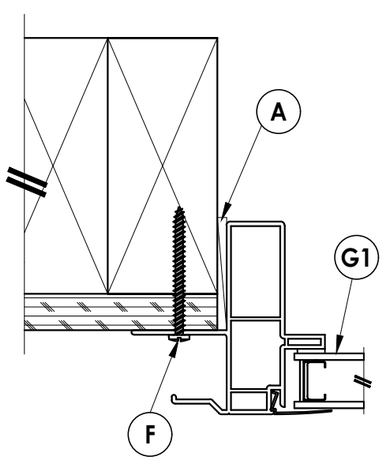

INTERIOR

EXTERIOR

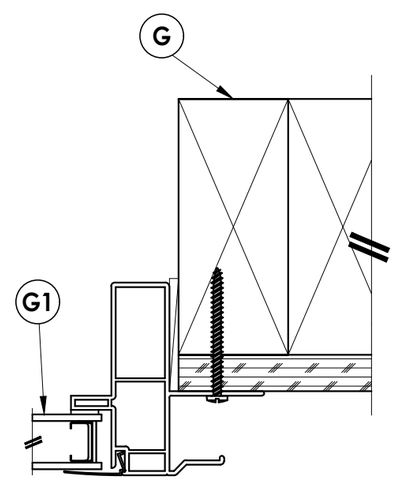

1/3 **HORIZONTAL CROSS SECTION**

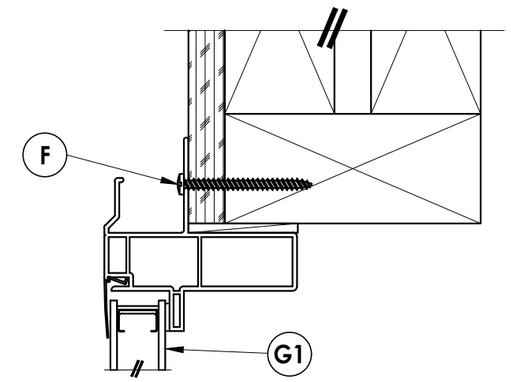

EXTERIOR

INTERIOR

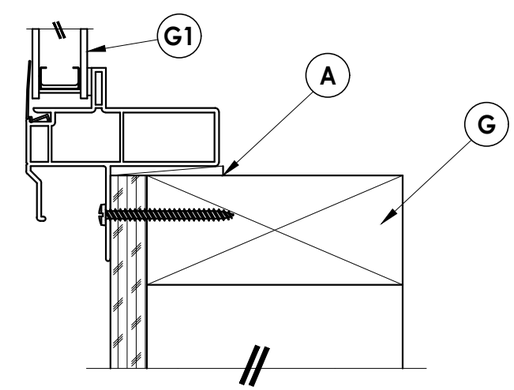

2/3 **VERTICAL CROSS SECTION**

Z:\2023 FBC Drawings\Lippert Components, Inc\FL-995 R12\FL-995.6.dwg

Documents Prepared By:
Lyndon F. Schmidt
P.E. No. 43409

RW BUILDING CONSULTANTS, INC.
P.O. Box 230, Valrico, FL 33595
Phone No.: 813.659.9197
FBPE Registry No. 9813

PRODUCT: *FIXED WINDOW*

PART OR ASSEMBLY: *HORIZONTAL & VERTICAL CROSS SECTIONS*

REVISIONS

NO.	DATE		BY
3	9/18/23	UPDATE TO 8TH ED. (2023) FBC	LFS
2	10/13/17	UPDATE TO 6TH ED. (2017) FBC	LFS
1	2/23/15	UPDATE TO 5TH ED. (2014) FBC	JK

DATE: 10/11/12
SCALE: N.T.S.
DWG. BY: JK
CHK. BY: LFS
DRAWING NO.: FL-995.6
SHEET 3 OF 4

© 2012 R.W. Building Consultants Inc.

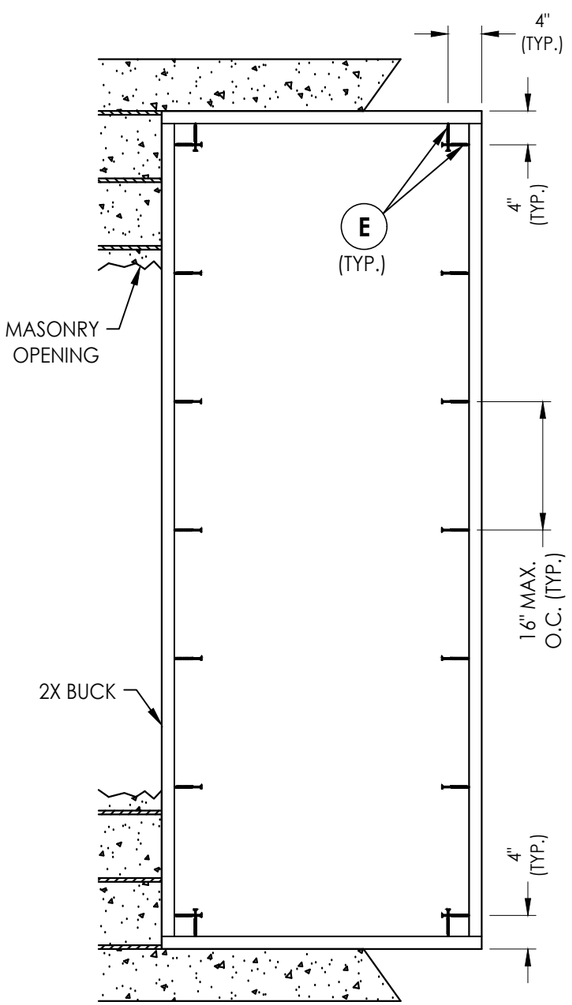

BUCK ANCHORING

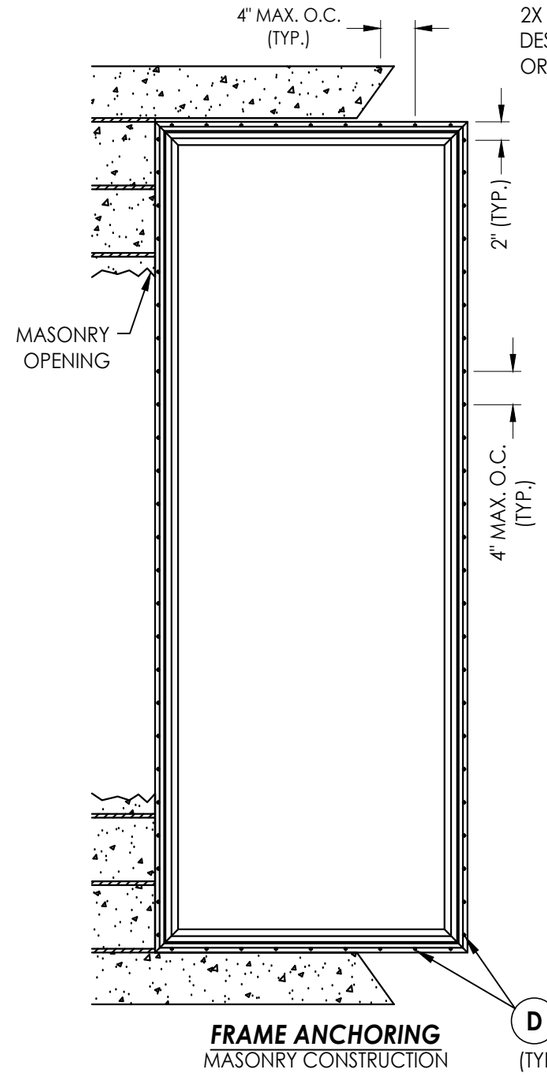

FRAME ANCHORING
MASONRY CONSTRUCTION

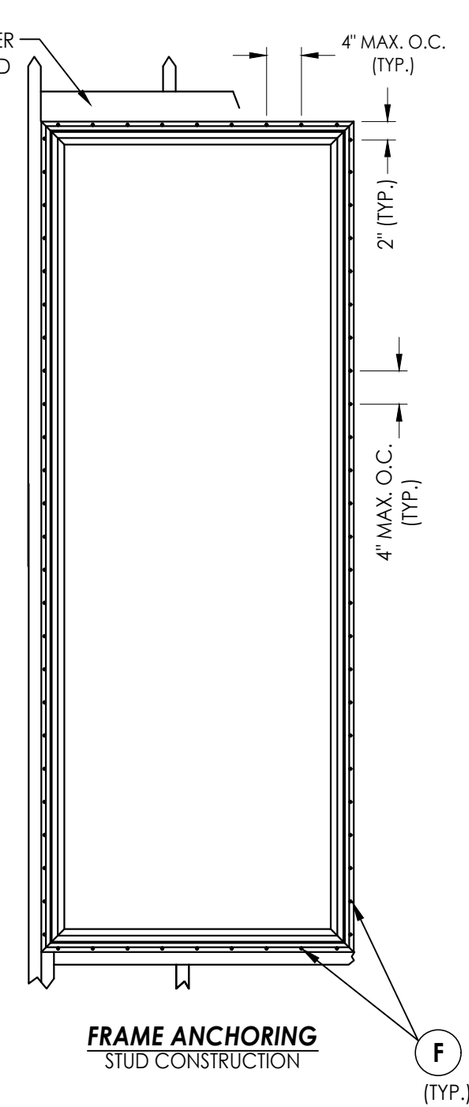

FRAME ANCHORING
STUD CONSTRUCTION

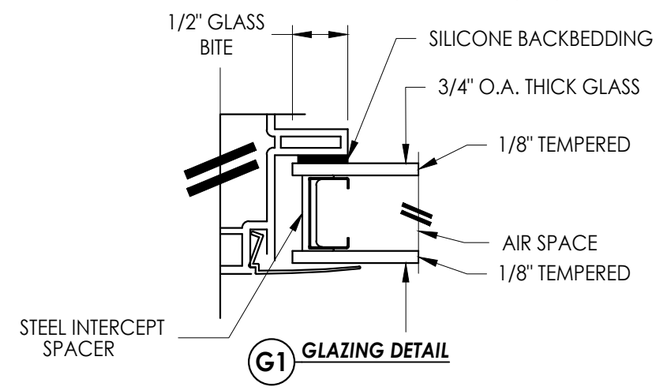

GLAZING DETAIL

CONCRETE ANCHOR NOTES:

1. *Concrete anchor locations at the corners may be adjusted to maintain the min. edge distance to mortar joints.*
2. *Concrete anchor locations noted as "MAX. ON CENTER" must be adjusted to maintain the min. edge distance to mortar joints, additional concrete anchors may be required to ensure the "MAX. ON CENTER" dimension are not exceeded.*
3. *Concrete anchor table:*

ANCHOR TYPE	ANCHOR SIZE	MIN. EMBEDMENT	MIN. CLEARANCE TO MASONRY EDGE	MIN. CLEARANCE TO ADJACENT ANCHOR
ITW TAPCON®	1/4"	1-1/4"	2"	4"
DeWALT ULTRACON+®	1/4"	1-1/4"	1"	4"

WOOD SCREW INSTALLATION NOTES:

1. *Maintain a minimum 5/8" edge distance, 1" end distance, & 1" o.c. spacing of wood screws to prevent the splitting of wood.*

Documents Prepared By:
Lyndon F. Schmidt
P.E. No. 43409

RW BUILDING CONSULTANTS, INC.
P.O. Box 230, Valrico, FL 33595
Phone No.: 813.659.9197
FBPE Registry No. 9813

PRODUCT: *FIXED WINDOW*

PART OR ASSEMBLY: *BUCK & FRAME ANCHORING AND GLAZING DETAIL*

REVISIONS

NO.	DATE	BY
3	9/18/23	LFS
2	10/13/17	LFS
1	2/23/15	JK

UPDATE TO 8TH ED. (2023) FBC
UPDATE TO 6TH ED. (2017) FBC
UPDATE TO 5TH ED. (2014) FBC

DATE: *10/11/12*
SCALE: *N.T.S.*
DWG. BY: *JK*
CHK. BY: *LFS*
DRAWING NO.: *FL-995.6*
SHEET 4 OF 4

© 2012 R.W. Building Consultants Inc.

Z:\2023 FBC Drawings\Lippert Components, Inc\FL-995 R12\FL-995.6.dwg